California Polytechnic State University Pomona
DEPARTMENT OF ELECTRICAL & COMPUTER ENGINEERING

Circuit Analysis 2 Laboratory

ECE 2101L-03
Report #7

Lab 7 - RLC Circuits II

Prepared by
Kevyn Santos & Kaung Nyi Naing

Presented to
Sasoun Torousian

March 11, 2024

Introduction

In this lab experiment we will be examining the voltage and current relationships in RLC, series-parallel circuits. Examining this circuit requires us to analyze each element on its own, and calculating impedances of the series-only element and parallel-only element. It is important to note that these elements produce their own phase angle. We will also be using a sense resistor so that we can measure our voltage and use it to find current. Overall, we will need to utilize KCL and KVL techniques, as well as other techniques we learned from previous labs to successfully complete this experiment.

Parts List:

Resistor - 1kΩ, Inductor - 10mH, Capacitor - 10nF, Resistor - 10Ω

Pre Lab:

1 - Find v(t) in the RLC circuit below.

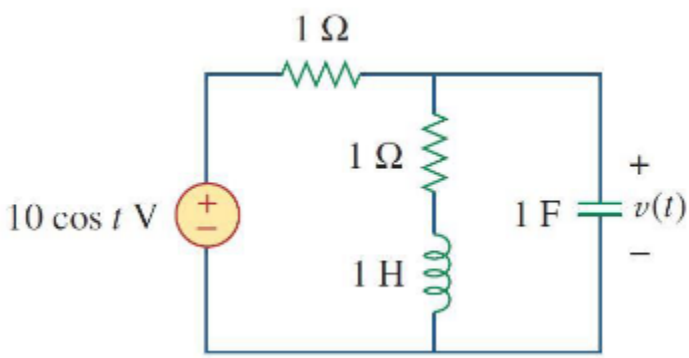

v(t) = 6.324*cos(t-18.4349)

2 - Calculate vo(t) in the circuit below.

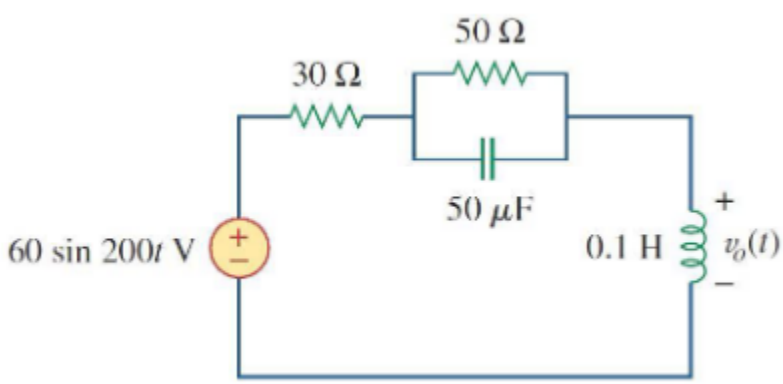

Vo(t) = 17.143*sin(200t + 90°)

Lab:

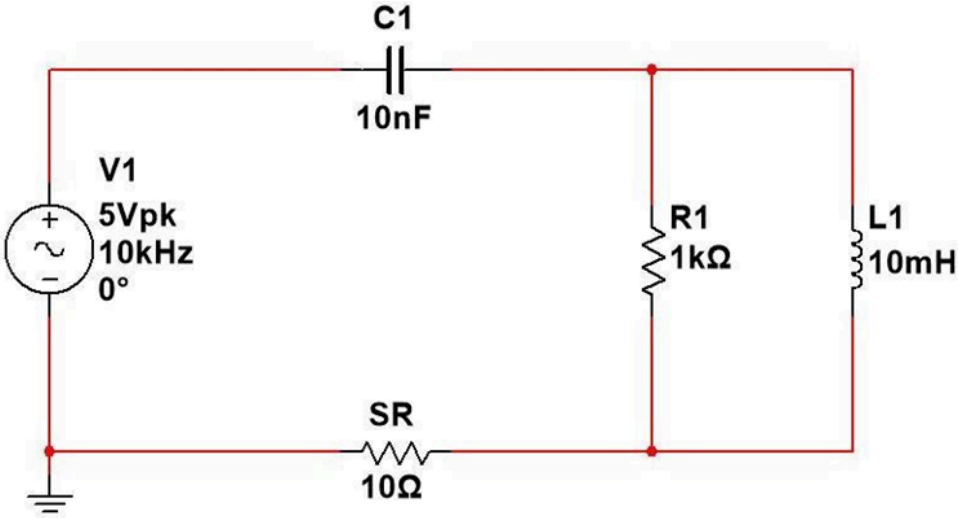

Figure 1

Oscilloscpe Pictures:

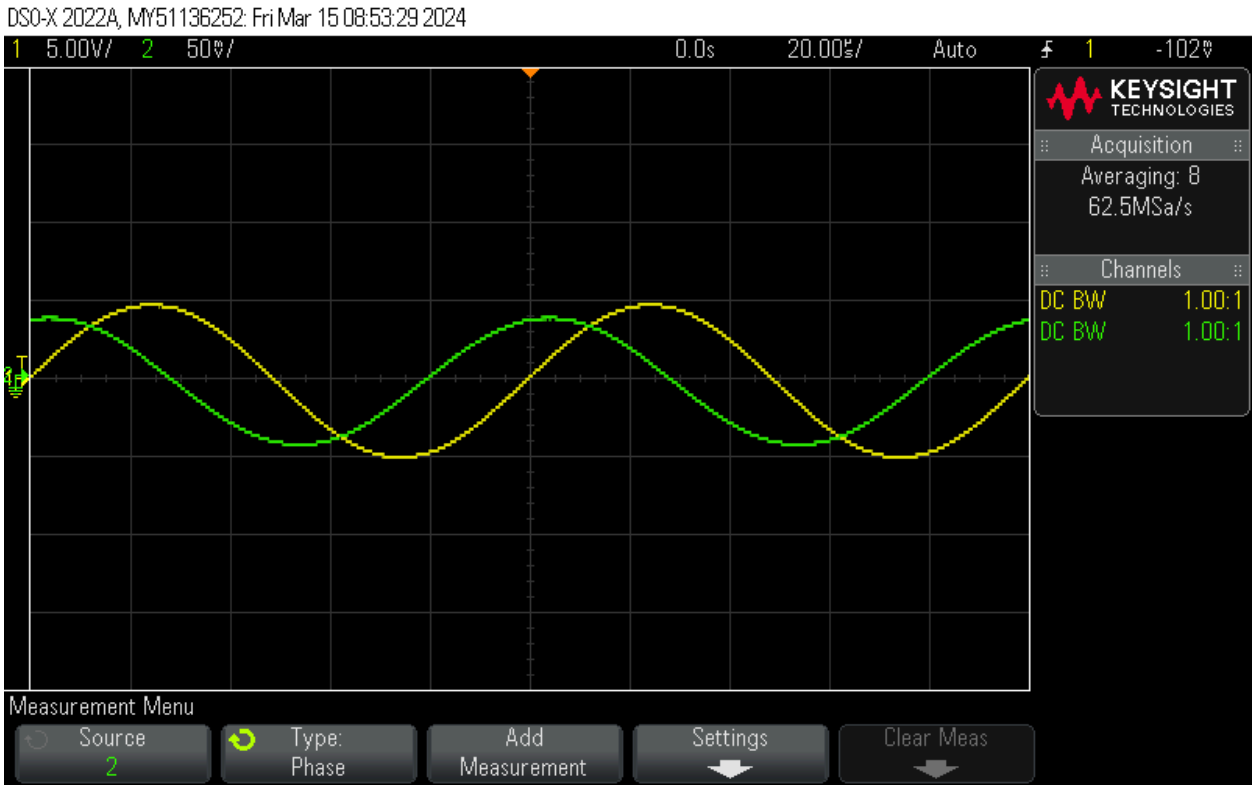

Figure 2 - Vin and Iin (x10Ohms)
Where, yellow: Vin, green: Iin

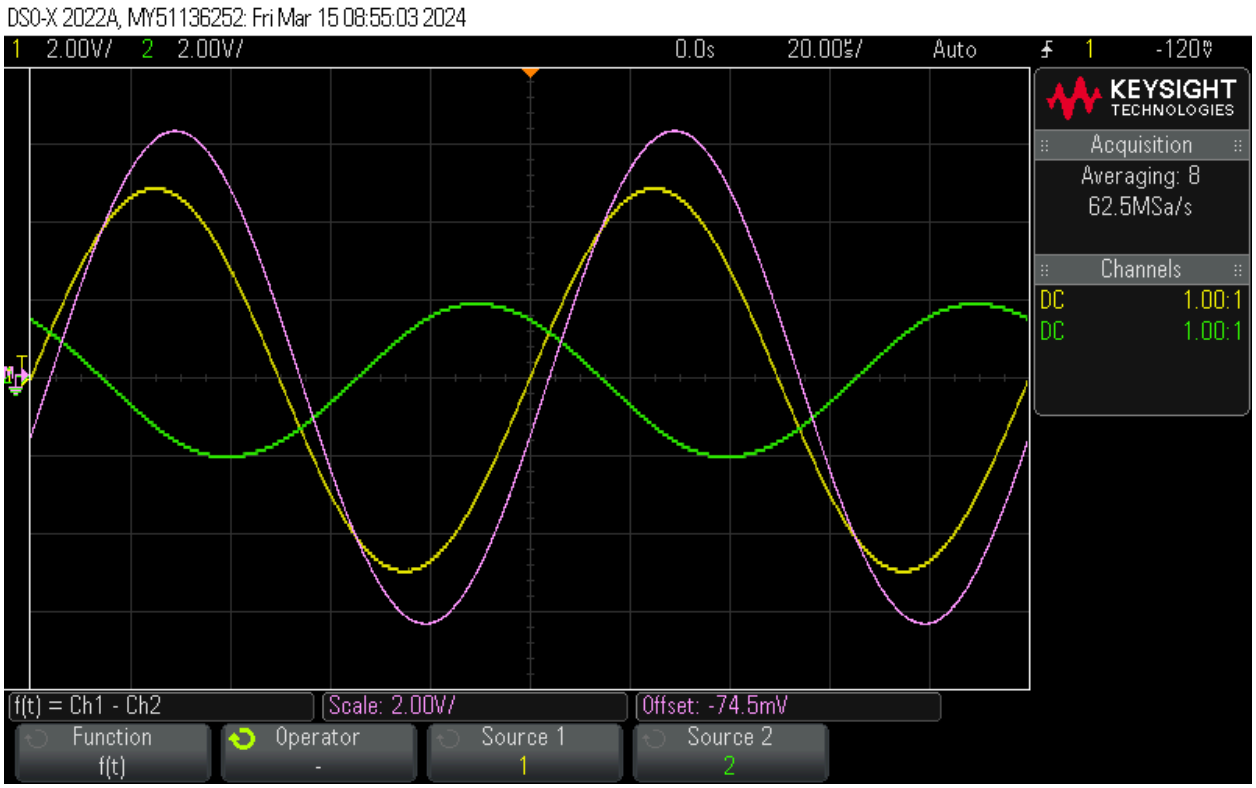

Figure 3 - Vin, VC, VLR
Where, yellow: Vin, green: VLR, purple: VC

Simulations

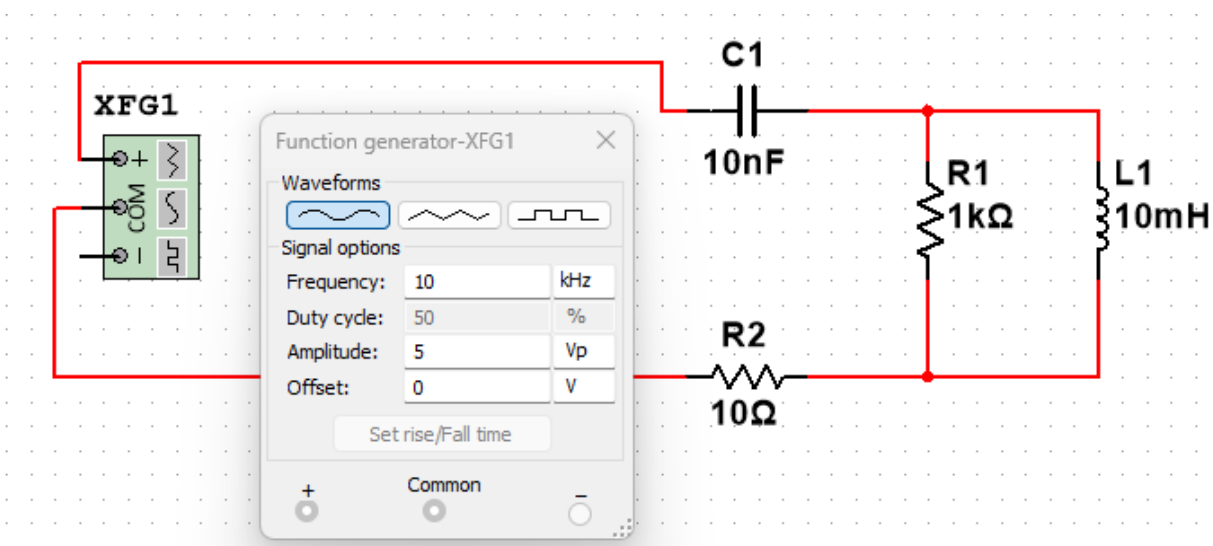

Figure 4 - Simulation Schematic and Vin

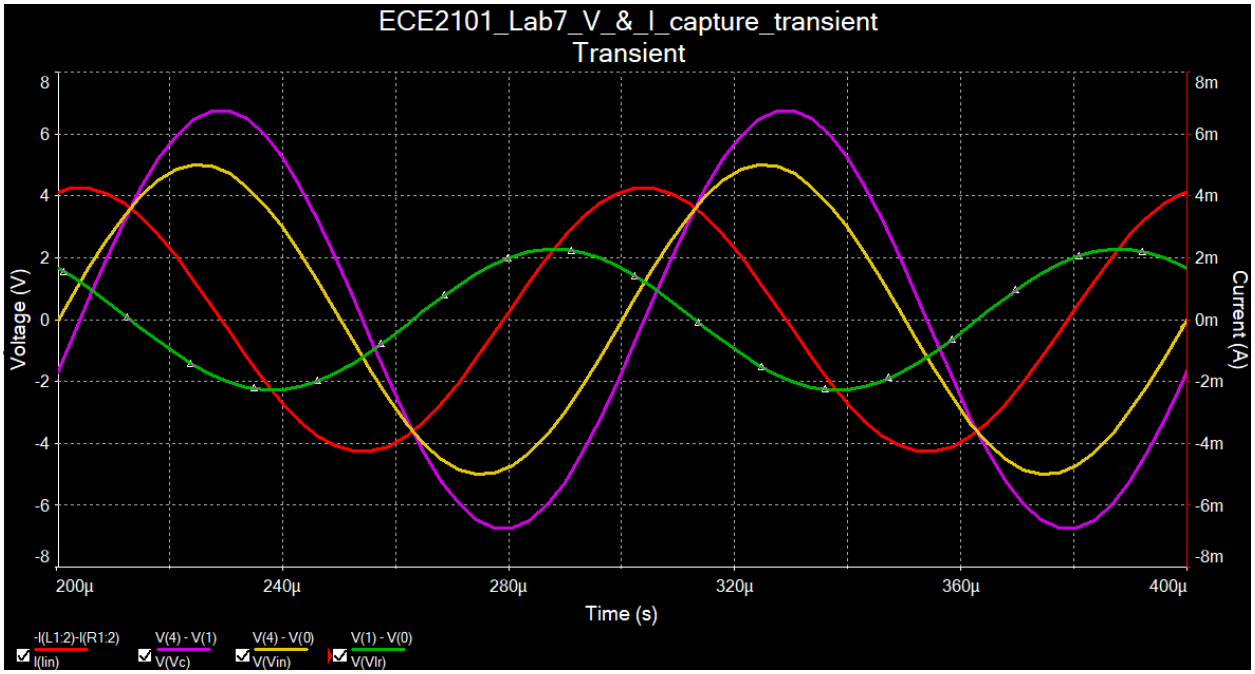

Figure 5 - Simulation Output Graph
Where, yellow: Vin, green: VLR, purple: VC, red: In (right axis)

PCB Design

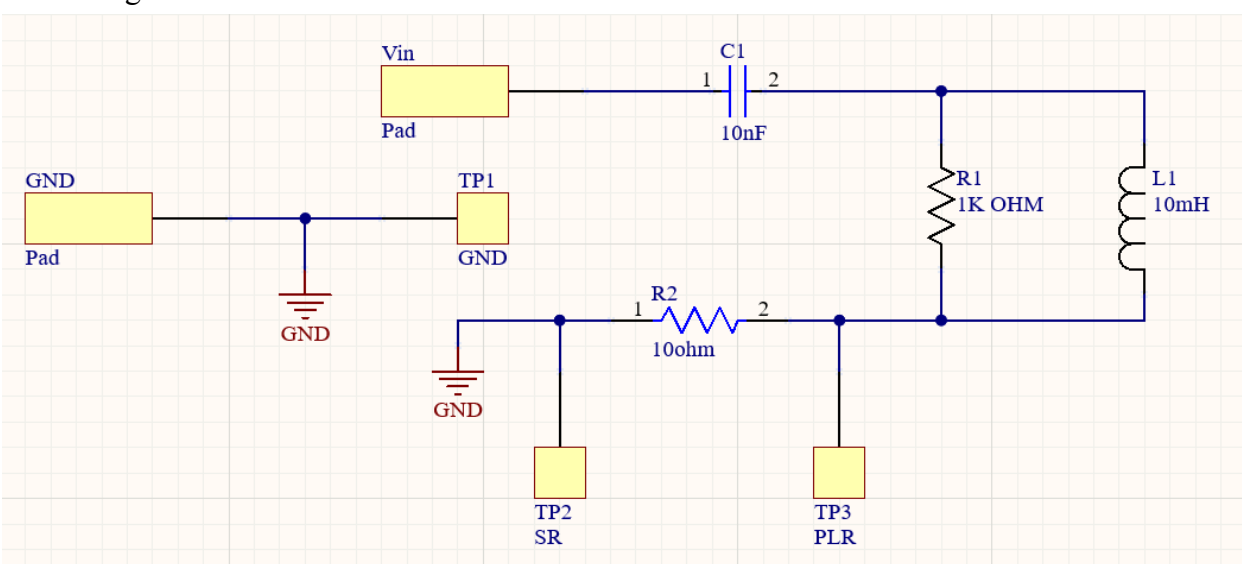

Figure 6 - PCB Schematic

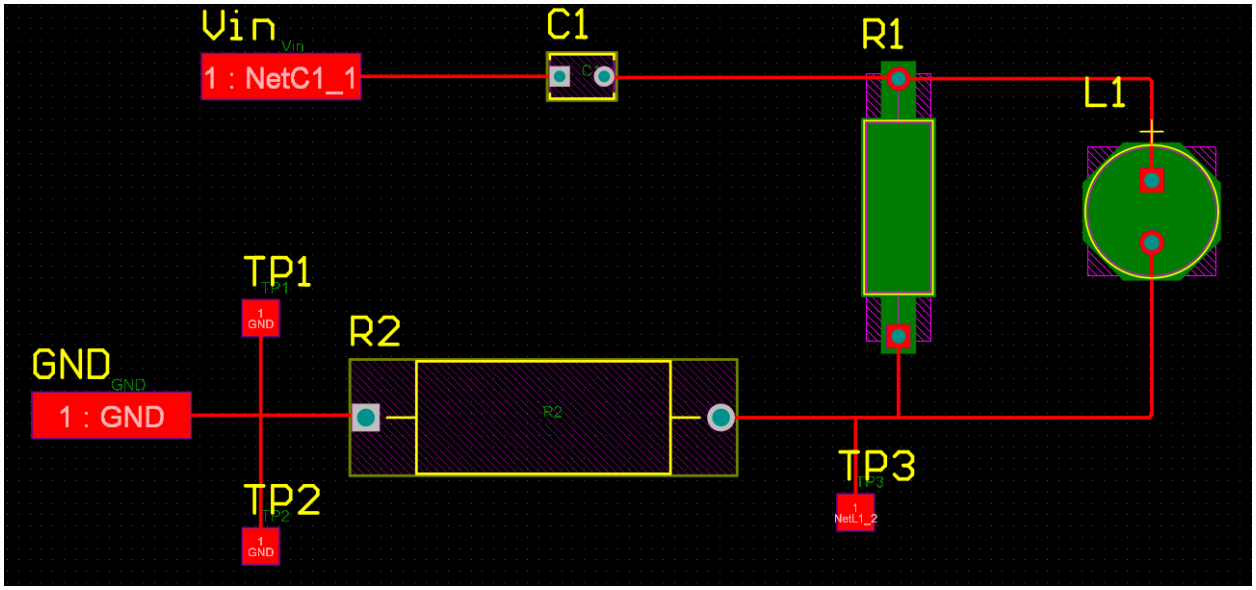

Figure 7 - PCB Design

Phasor Plot

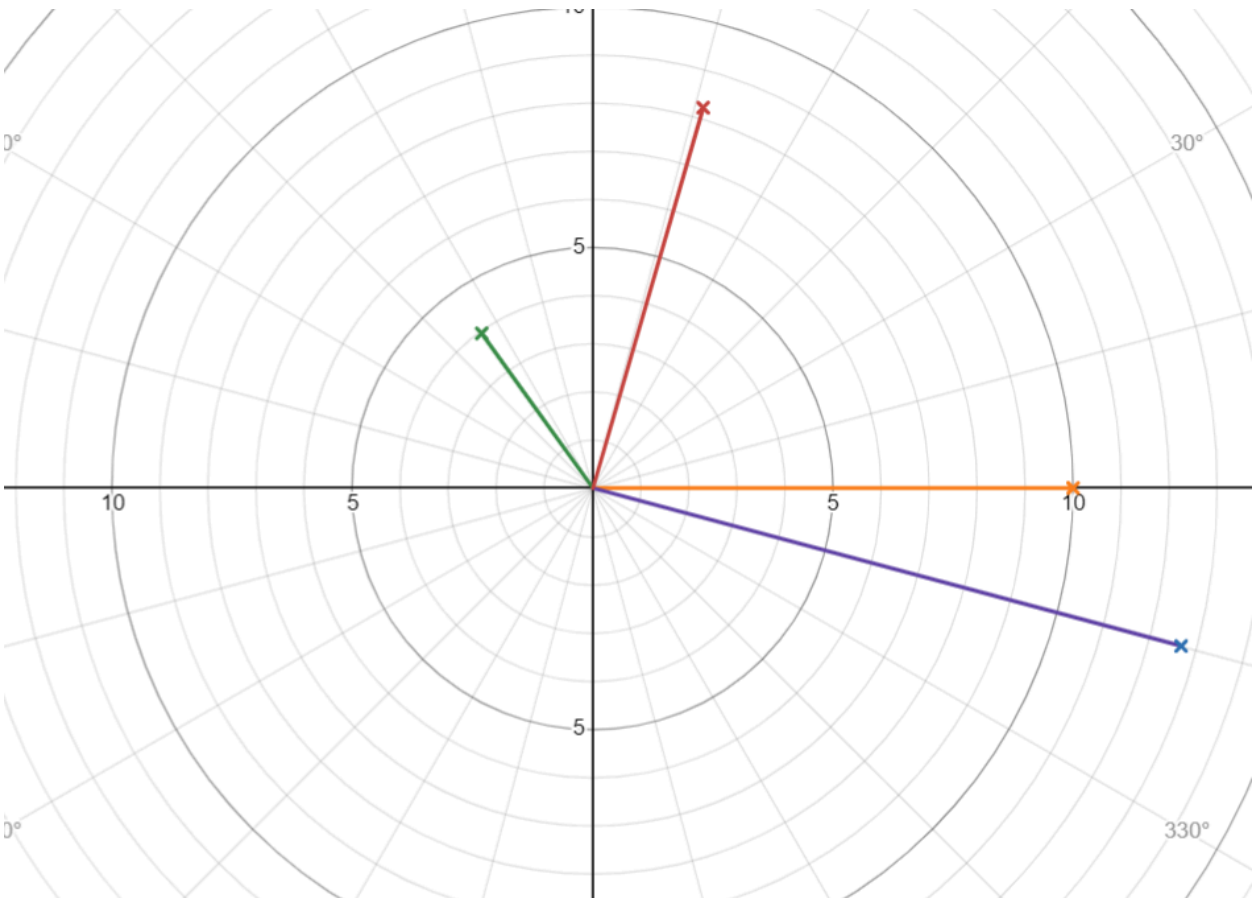

Figure 8 - Phasor Plot

Where, yellow: Vin, green: VLR, purple: VC, red: In

Calculations

Include Phase Angle $X_C =$	$\frac{1}{j*w*C1}$ = -1591.549j = 1591.549∠-90 Ω
Include Phase Angle $X_L =$	j*w*L1 = 628.3185∠90 Ω

Find $Z_{parallel}$

Polar Form: $R\ x\ X_L$	$\frac{1000\angle 0 * 628.3185\angle 90}{1000\angle 0 + 628.3185\angle 90} = \frac{1628.3185\angle 90}{1000\angle 0 + 628.3185\angle 90}$
Rectangular Form: $R + X_L$	$\frac{1628.3185j}{1000 + 628.3185j}$ = 283.0432 + 450.47724j Ω
Convert R + X_L to Polar Form:	$\frac{1628.3185\angle 90}{1181.0098\angle 32.1419}$
Polar Form: $Z_P = R \parallel X_L$	532.0180∠57.8581 Ω

Total Impedance

Rectangular Form: X_C	-1591.549j
Rectangular Form: x = y =	$\frac{-1591.549j}{283.0432 - 1141.0722j}$
Rectangular Form: $Z_T = X_C + Z_P$	= -1591.549j + 283.0432 + 450.47724j = 283.0432 - 1141.0722j Ω
Convert Z_T to Polar Form: Magnitude = Phase Angle =	$\frac{1175.6527}{-76.068948}$ Ω

Voltage Divider

(Phasors are in RMS but the Oscilloscope gives V_{P-P} Leave your results in V_{P-P}).

$V_{LR} =$	4.5253 ∠ 133.9270 V
$V_C =$	13.5376 ∠ -13.9311 V

$I_T =$	8.5059136 ∠ 76.068948 mA

Data Tables

	Theory	Experimental	% Deviation
X_C	-1591.549j	-1540.3668j	3.22
X_L	628.3185j	593.32514i	5.57
$R \parallel X_L$	532.018∠57.8581	481.1665∠52.0000	9.56 ∠ 10.12
Z_T Magnitude	1175.6527	1215.0668	-3.35
$Z_T\,\theta$	-76.0689	-73.8	-2.98

Table 1

	Theory Mag	Theory θ	Exp Mag	Exp Delay	Exp θ	% Dev Mag	% Dev θ
V_{LR}	4.5253	133.9270	3.96	35.00u	125.8	12.49	6.07
V_C	13.5376	-13.9311	12.68	-4.17u	-15.0	6.33	-7.67
i_{in}	8.5059m	76.0689	8.23m	20.51u	73.8	3.24	2.98

Table 2

Post Lab:

1- Find current Io in the circuit shown in Fig. below.

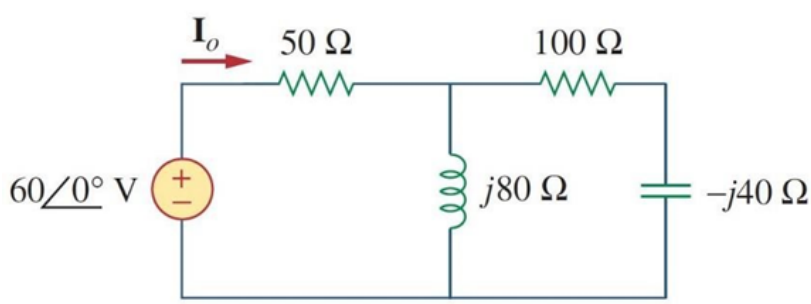

Io = 0.5∠-28.85 A

2- Find **I***o* in the circuit of Fig. below.

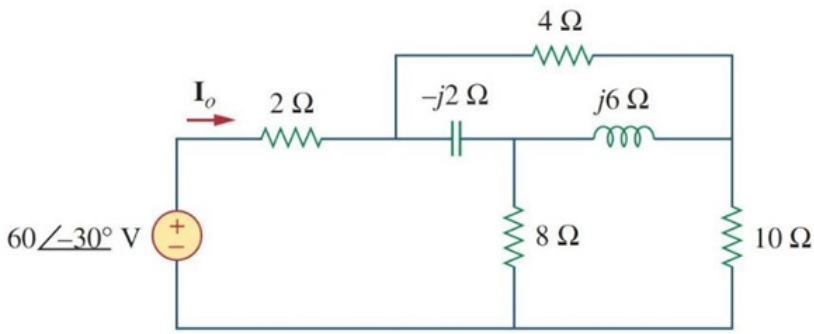

Io = 8.87∠-21.68 A

Conclusion

In this lab we were able to successfully analyze our circuit. We used the given values to get our theoretical calculations so that we have reference values for our experimentals. After setting up our circuit, we first measured over the sense resistor. After, we measured across the parallel inductor-resistor branch. Using the math function we found the capacitor voltage by subtracting the parallel LR branch by SR. Overall, this lab taught us how to analyze RLC serial-parallel circuits and utilize KVL, KCL, and SR techniques.